Color Coding Schematics #3

Name _____ Date _____ Period _____

Student will highlight the portions of the diagram as follows: Red or pink for all wires that are battery hot at all times. Green for all wires that are grounded at all times. Orange for all wires that are powered with a switch. Yellow for all wires that are grounded through a switch. Any wires that do not fall in any of these categories, do not color. See power point for clues.

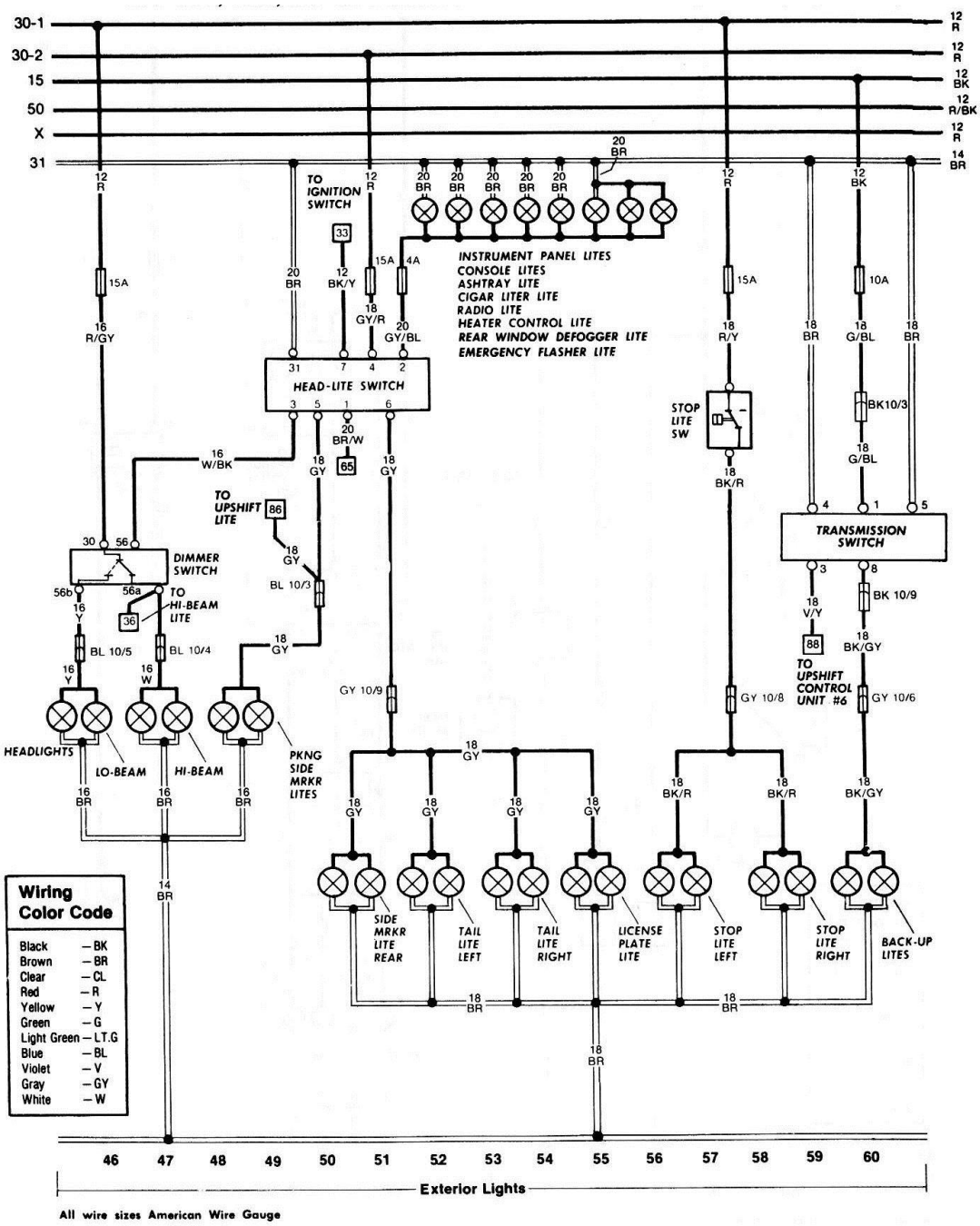

CC Schematics #3 / 04-13-2015 / vdb